VersaBracket™ *Installation Instructions*

Attach almost anything to metal roofs *The Right Way!*®

S-5!®
The Right Way

THE **VersaBracket** IS MADE FOR **TRAPEZOIDAL EXPOSED-FASTENED PROFILES**

S-5!® Warning! Please use these products responsibly! Visit our website or contact your S-5! distributor for available load test results. The user and/or installer of these parts is responsible for all necessary engineering and design to ensure the VersaBracket has been properly spaced and configured.

Notice to S-5! users Due to the many variables involved with specific panel products, climates, snow melt phenomena and job particulars, the manufacturer cannot and does not express any opinions as to the suitability of any S-5! assembly for any specific application and assumes no liability with respect thereto. S-5! products are tested for ultimate holding strength on various profile types, substrates and materials. This information is available from the S-5! website: www.S-5.com. This document is an installation guide only and the photographs and drawings herein are for the purpose of illustrating installation, tools and techniques, not system designs. Information contained within is intended to apply to the document as a whole.

VersaBracket should be placed in the flat of the panel, between the ribs, and must be mounted directly over and into the supporting structure of the roof, i.e. wood decking, wood or steel purlins or trusses, NOT into the metal roofing material alone.

To ensure brackets are installed in a straight line when desired, install a single VersaBracket at each end of the roof, spaced at a measured, consistent distance from the bottom (eave) edge. Use a string line between the two brackets. Mount the remaining VersaBracket along the string line, directly into the supporting structure of the roof.

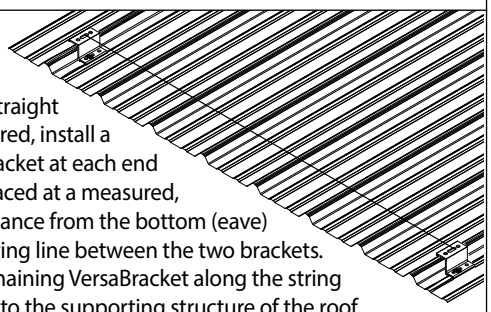

Tools Required

- ❑ **Electric Screw Gun***
- ❑ **Rag**
- ❑ **String Line**

**For time-saving tool recommendations, contact S-5!*

Use Proper Hardware

All certified testing (load and weathering) is done using S-5! screws and related hardware and sealants. Use appropriate S-5! screws when attaching this product to the supporting structure. They are sold separately.

Metal to Metal Screw Specifications: #12 Self Drill Screw 1-1/2", and 2-1/2" Length - 3/8" Hex Washer Head - Zinc Alloy Capped

Metal to Wood Screw Specifications: 1/4-14 Type 17 - AB Milled Point - 1-1/2" to 2-1/2" Length - 3/8" Hex Washer Head - Zinc Alloy Capped

How To Install VersaBracket

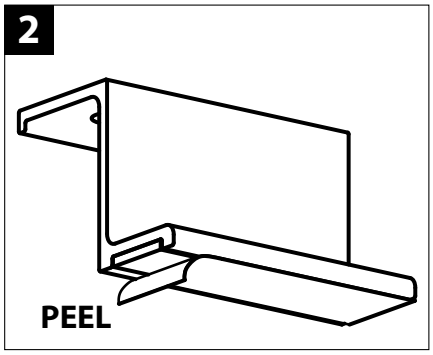

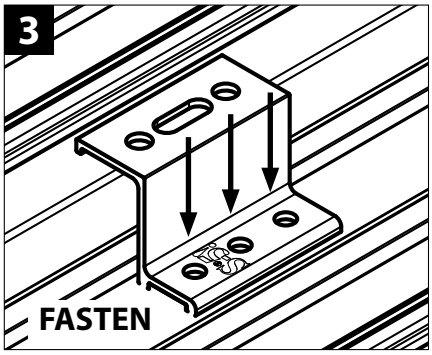

1. Determine the location of the roof's supporting structure. When possible, secure the VersaBracket using all hole locations; when not possible, always use the two upslope hole locations. The only surface preparation necessary is to simply wipe away excess oil and debris.
2. Peel the release paper from the base, align the bracket and apply it to the roof surface.
3. Secure the VersaBracket with approved screws through the prepunched holes directly into the roof's supporting structure (three holes are provided for convenience and versatility). Consult the S-5! Load Table on the S-5! website for more information.
4. The VersaBracket is now ready to install ancillaries using a nut-and-bolt connection. A stainless steel M8-1.25 nut and bolt are required (not included).

S-5!® Warning! Please use this product responsibly! Products are protected by multiple U.S. and foreign patents. For published data regarding holding strength, fastener torque, patents, and trademarks, visit the S-5! website atwww. S-5.com. Copyright 2026, Metal Roof Innovations, Ltd. S-5! products are patent protected. S-5! aggressively protects its patents, trademarks, and copyrights.

www.S-5.com
888-825-3432